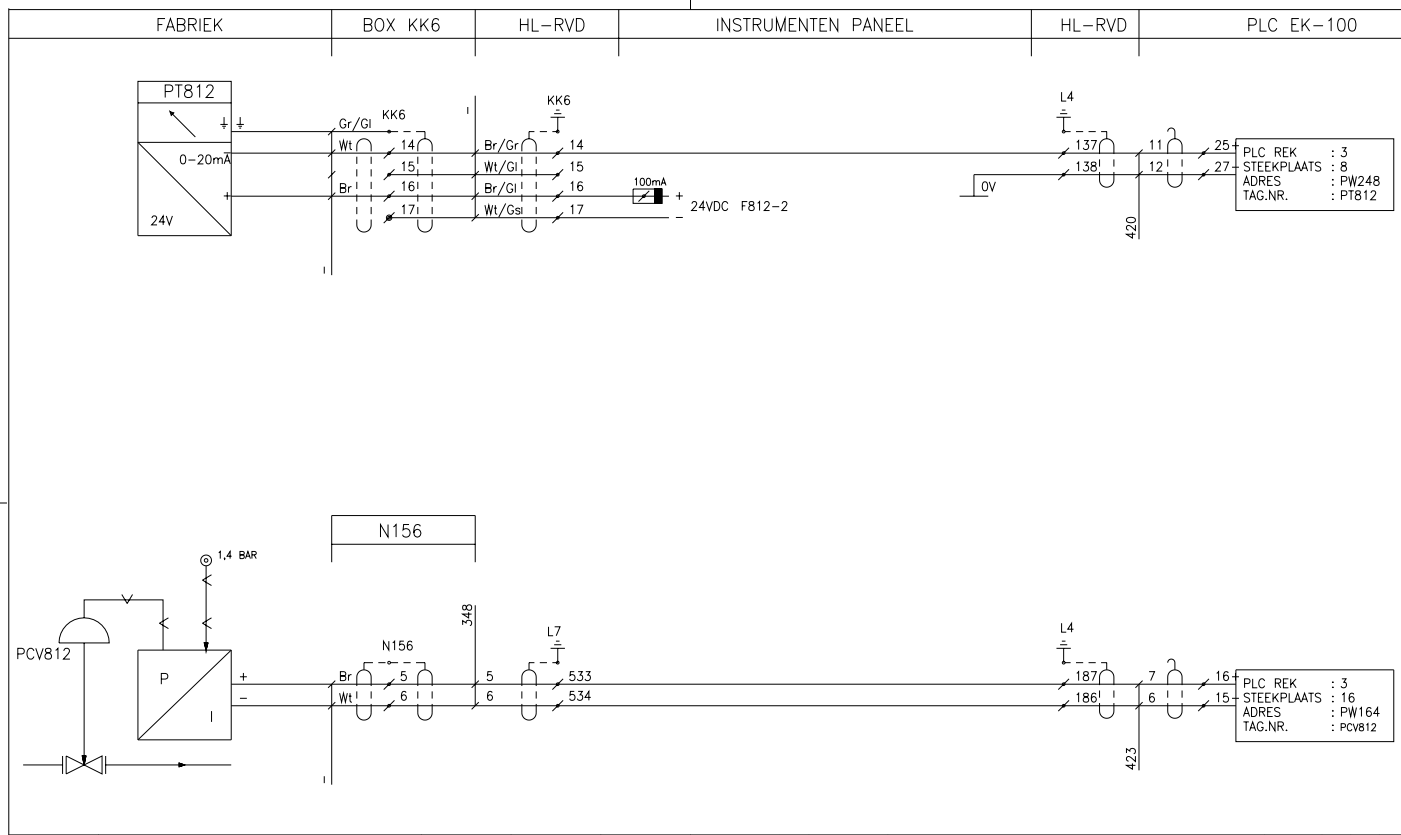

Rev.:	Date:	Disription:	Drawn by:	Ckd:	Seen by:
A	26-10-1994	SEVERAL CHANGES	R.G.	J.S.	J.Li.
B	14-12-1994	AS BUILT	N.S.	J.S.	J.Li.

HVL ELEKTROTECHNIEK
POSTBUS 1341
6201 BH MAASTRICHT
043-619090

Client: LB METREX B.V.
Project: ROOKGAS ONTZWAVELING
Title: HOOK-UP ROOKGAS NAAR ROOKGASKOELER Z815
Tag number: P-812

Drawn by:	Filenumber:	Scale:	Size:	Ordernumber:	Sub.:	Drawing number:	Sht.:	of:	Rev.
R.G. 18-08-1994	P-812	- : -	A3	9580	00	3-H-800	0000	0000	B

TAG Nr.:	Fabrikaat en Type:	Spec./Magn.Nr	Instelling	Meetbereik	Opm./Tek.
PCV812	P.U.				
PT812	P.U. INTRAUTOMATION		0,1-0,1 BAR		

Demo Version